Product description

HexaLite 4/8

Customer	Supplier
Company name	
Editor	
Phone number	
E-mail	

Fields of Application

For pumping of thin, clean, non-aggressive and non-explosive liquids free from solid particl

Water supply systems
Booster sets in low storey buildings
Water treatment systems
Industrial facilities for process water
Sanitary and cleaning installations
Irrigation plants

Design Specification

HexaLite series pumps is a horizontal axis, ring section design multistage centrifugal pump of non-self priming type. All of pump components in contact with liquid are made of stainless steel material and the pump is driven with a standard electric motor.

The pressure-resistant casing and the components which fluid is flowing through are anchored by using casing studs between top side and bottom side of the pump.

While suction nozzle is located front side of the pump, discharge nozzle is located top side of the pump .

When viewed from driver side, rotation of direction is clockwise .

Technical Data

Flow Range (Q)	: 1 - 7 m³/h
Head Range (Hm)	: 25 - 100 m
Speed Range	: 2900 rpm
Temperature Range	: 0 - 40 ºC

Bearings

There is no ball bearing on the pump. However, motor bearings carry the axial load occuring in the pump.

Shaft Seal

In HexaLite series pumps, mechanical seals are used for sealing.

Technical data

HexaLite 4/8

	Customer	Supplier
Company name		
Editor		
Phone number		
E-mail		

Operating data specification

Pumped fluid	Water		Rated flow		m³/h
Solids			Rated head		m
Kind			Geodetic head		m
Percentage of solid content	0		Available system NPSH		m
pH value			Inlet pressure (pin)	0	kPa
Temperature	20	°C	Altitude above sea level	100	m
Density	998.3	kg/m³	Max. operating pressure	802	kPa
Kin. viscosity	1.005	mm²/s	Max. diff. pressure	802	kPa
Vapour pressure	2.34	kPa			

Pump

Make	MAS DAF		Impeller type		
Pump type	HexaLite 4/8		Impeller construction		
Frame size	4		Impeller Ø		
Design			Max.	95	mm
Self priming	☒ No		designed	95	mm
Speed	2890	1/min	Min.	95	mm
Stages	8		Flow		
Suction port			Nominal	5.31	m³/h
Pressure rating			Max.	7	m³/h
Nominal pipe size			Min.	0	m³/h
Standard			Head		
Discharge port			Nominal	56.4	m
Pressure rating			Min.	39.8	m
Nominal pipe size			Max.	81.9	m
Standard			Shut off head	81.9	m
Shaft power		kW	NPSH3		m
Shaft power P2(Q=max.)	1.48	kW	Efficiency		%

Motor

Make/Type	1.5 KW-2900 RPM / 90S	
Specific design	− / 50 Hz / Pole pairs 1	
Rated power	1.5	kW
Electric voltage	1~ 230	V
Speed	2880	1/min
Electric current	9.8	A
Frame size	90S	
Degree of protection	IP 55	
Type of protection		
Explosion protection		

Coupling

Make/Type		
Series		
Spacer length		mm
Frame size		

Materials

Pump		Shaft seal	AQ1EGG
Discharge Casing	X14CrMoS17/AISI 430	Material code	AQ1EGG
Suction Casing	X14CrMoS17/AISI 430	Seal face	Carbon graphite antimony impregnated (A)
Thrust Plate	GJL-250 (GG25)	Seat	Silicon carbide (Q1, eSiC-Q7)
Impeller	X14CrMoS17/AISI 430	Elastomer	EPDM (E)
Shaft	X14CrMoS17/AISI 430	Metal parts	CrNiMo steel (G)

Performance curves

HexaLite 4/8

Customer	Supplier
Company name	
Editor	
Phone number	
E-mail	

Power data referred to: Water; 20°C; 998.3kg/m³; 1.005mm²/s Sense of rotation Clockwise from the drive end

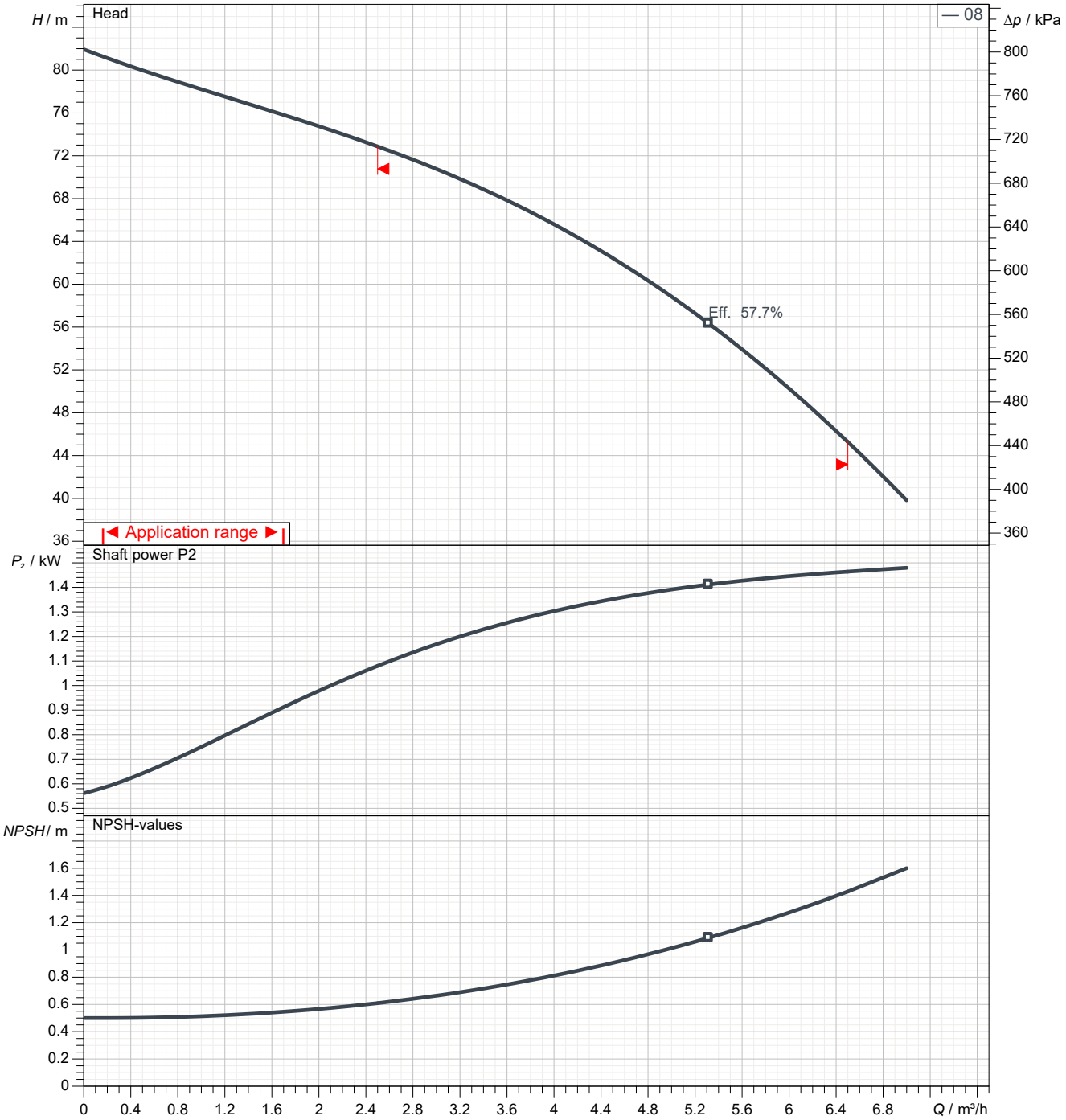

Pump curves in accordance with ISO 9906 2B

Pumped fluid	Water		Rated flow		m³/h
Temperature	20	°C	Rated head		m
Density	998.3	kg/m³	Shaft power		kW
Kin. viscosity	1.005	mm²/s	Speed	2890	1/min
Vapour pressure	2.34	kPa	NPSH3		m
Impeller Ø	95	mm	Efficiency		%

Brief description of pump

HexaLite 4/8

Customer

Company name
Editor
Phone number
E-mail

Supplier

Performance curves

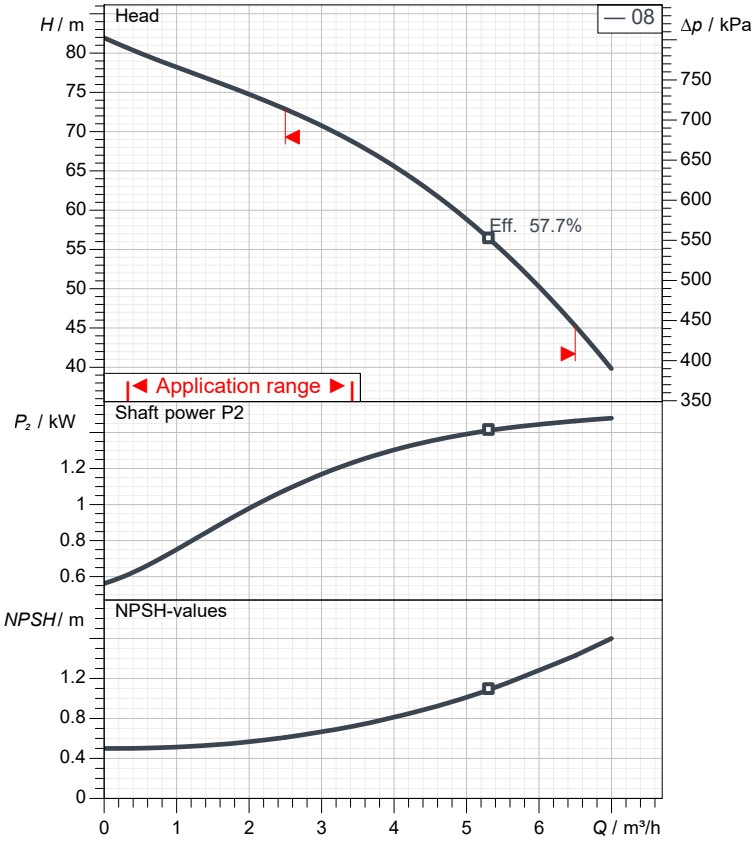

Pump curves in accordance with ISO 9906 2B

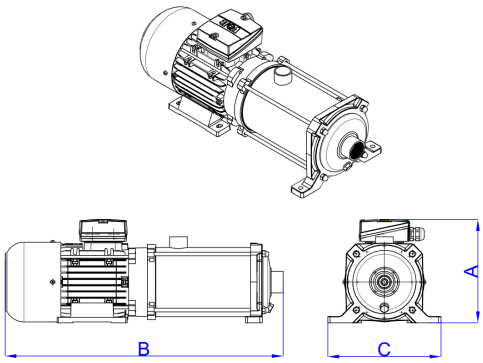

Dimensions	mm
A	270
B	590
C	250

Pump

Make	MAS DAF
Pump type	HexaLite 4/8
Design	
Suction port	
Pressure rating	
Nominal pipe size	
Standard	
Discharge port	
Pressure rating	
Nominal pipe size	
Standard	

Operating data specification

Pumped fluid	Water	
Temperature	20	°C
Density	998.3	kg/m³
Kin. viscosity	1.005	mm²/s
Vapour pressure	2.34	kPa
Rated flow		m³/h
Rated head		m
Shaft power		kW
Speed	2890	1/min
NPSH3		m
Efficiency		%
Impeller Ø	95	mm

Motor

Make/Type	1.5 KW-2900 RPM / 90S	
Specific design	− / 50 Hz / Pole pairs 1	
Rated power	1.5	kW
Speed	2880	1/min
Electric voltage	1~ 230	V
Electric current	9.8	A
Degree of protection	IP 55	

Materials

Shaft seal	AQ1EGG
Material code	AQ1EGG
Seal face	Carbon graphite antimony impregnated (A)
Seat	Silicon carbide (Q1, eSiC-Q7)
Elastomer	EPDM (E)
Metal parts	CrNiMo steel (G)
Discharge Casing	X14CrMoS17/AISI 430
Suction Casing	X14CrMoS17/AISI 430
Thrust Plate	GJL-250 (GG25)
Impeller	X14CrMoS17/AISI 430
Shaft	X14CrMoS17/AISI 430

Pump dimensions

HexaLite 4/8

	Customer	Supplier
Company name		
Editor		
Phone number		
E-mail		

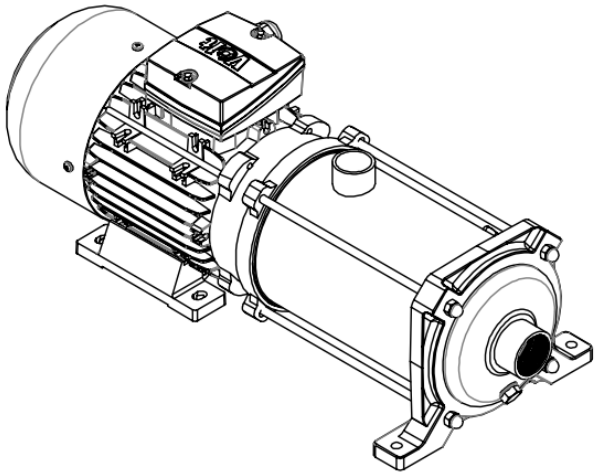

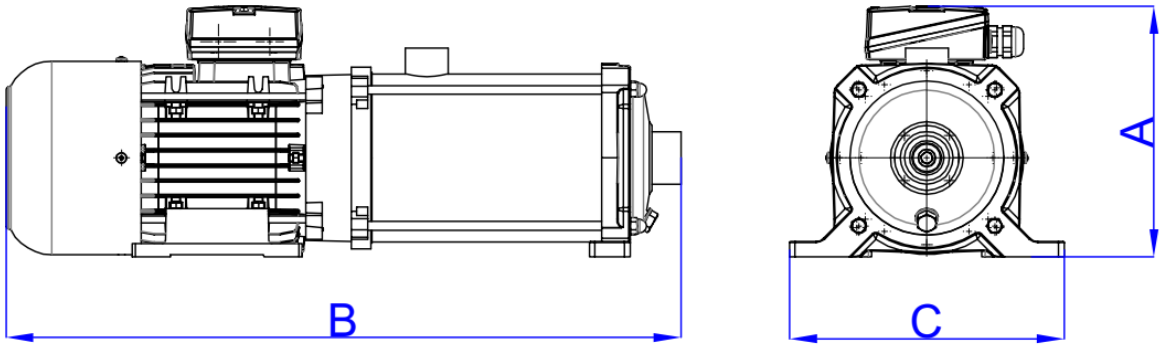

Dimensions	mm
A	270
B	590
C	250

Inlet / outlet

Suction port

Discharge port

Motor performance curve

1.5 KW-2900 RPM / 90S

Customer	Supplier
Company name	
Editor	
Phone number	
E-mail	

motor data

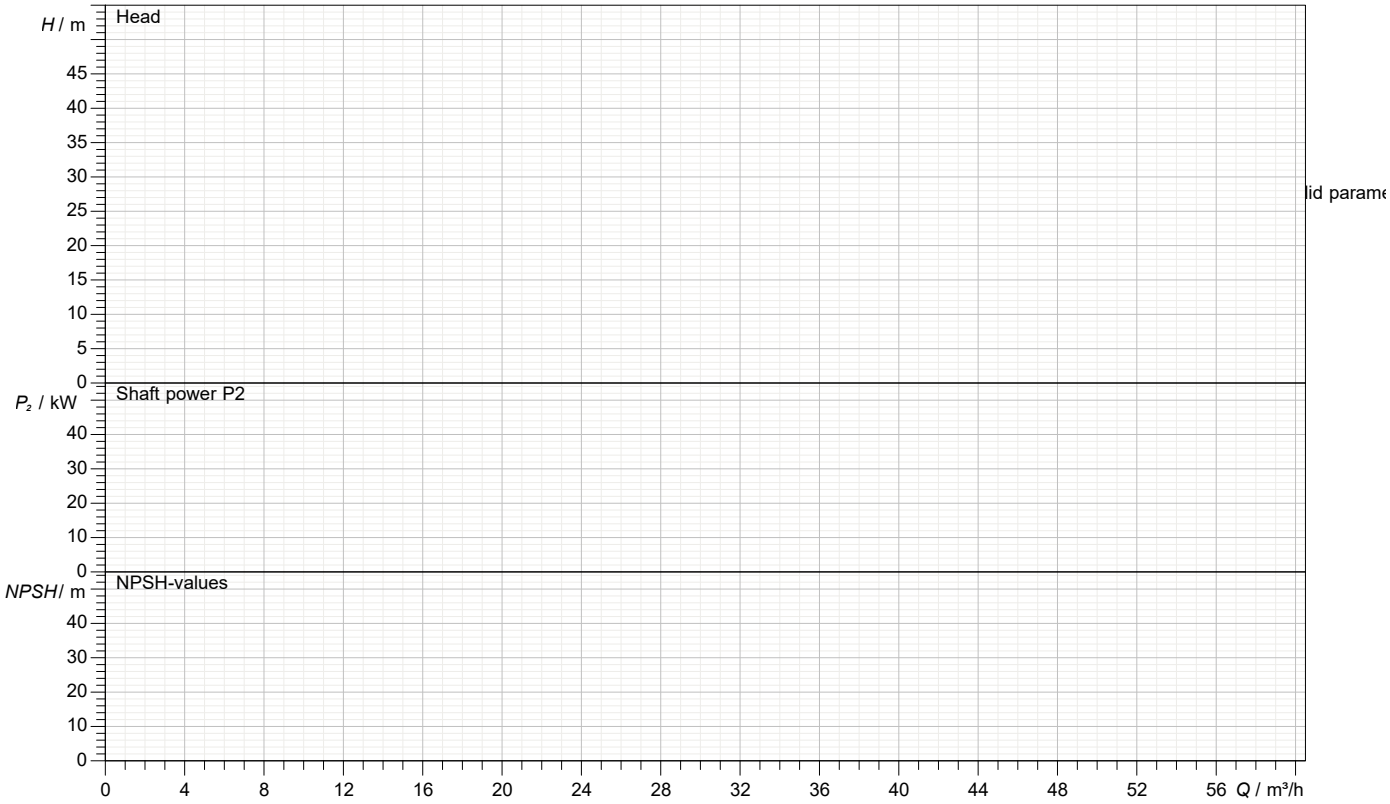

Symbol	No load	25 %	50 %	75 %	100 %	125 %

Motor

Make/Type	1.5 KW-2900 RPM / 90S		Degree of protection	IP 55
Specific design	− / 50 Hz / Pole pairs 1		Type of protection	
Rated power	1.5	kW	Explosion protection	
Electric voltage	1~ 230	V	Service factor	1.15
Number of poles			Starting current	
Speed	2880	1/min	Starting torque	
Electric current	9.8	A	Moment of inertia	
Power factor	0.91		No. starts per hour	
Frame size	90S		Rated torque	4.97 Nm
Efficiency class	−		Insulation class	F (155C°)

Motor dimensions

1.5 KW-2900 RPM / 90S

Customer	Supplier
Company name	
Editor	
Phone number	
E-mail	

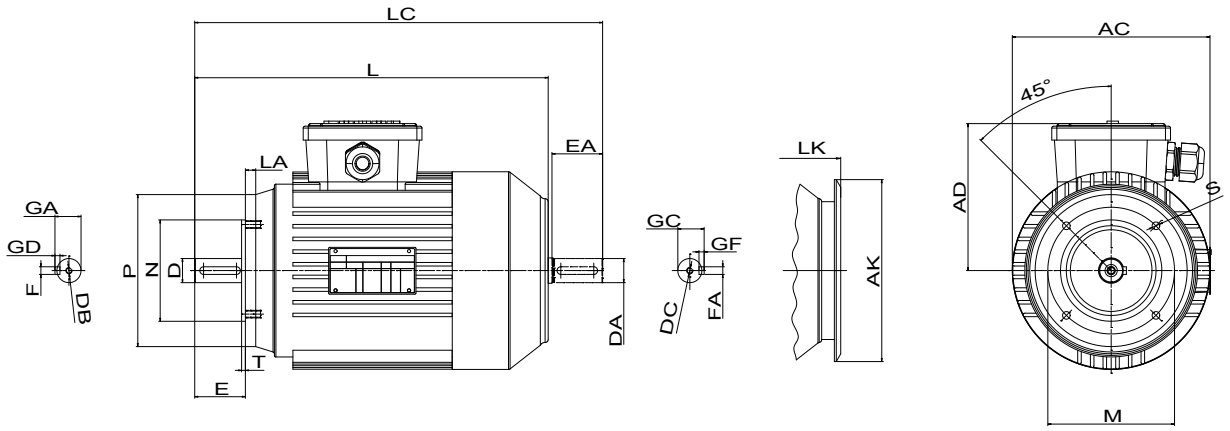

Dimensions	mm		
AC	176	LC	364
AD	126	LK	338
AK	151	M	130
D	24	N	110
DA	24	P	160
DB	M8	S	M8
DC	M8	T	3.5
E	50		
EA	50		
FAxGF	8X7		
FxGD	8X7		
GA	27		
GC	27		
L	309		
LA	16		

Flange connections

HexaLite 4/8

	Customer	Supplier
Company name		
Editor		
Phone number		
E-mail		

Suction connection		Discharge connection	
Dimensions	**mm**	**Dimensions**	**mm**

Spare part list

HexaLite 4/8

Customer	Supplier
Company name	
Editor	
Phone number	
E-mail	

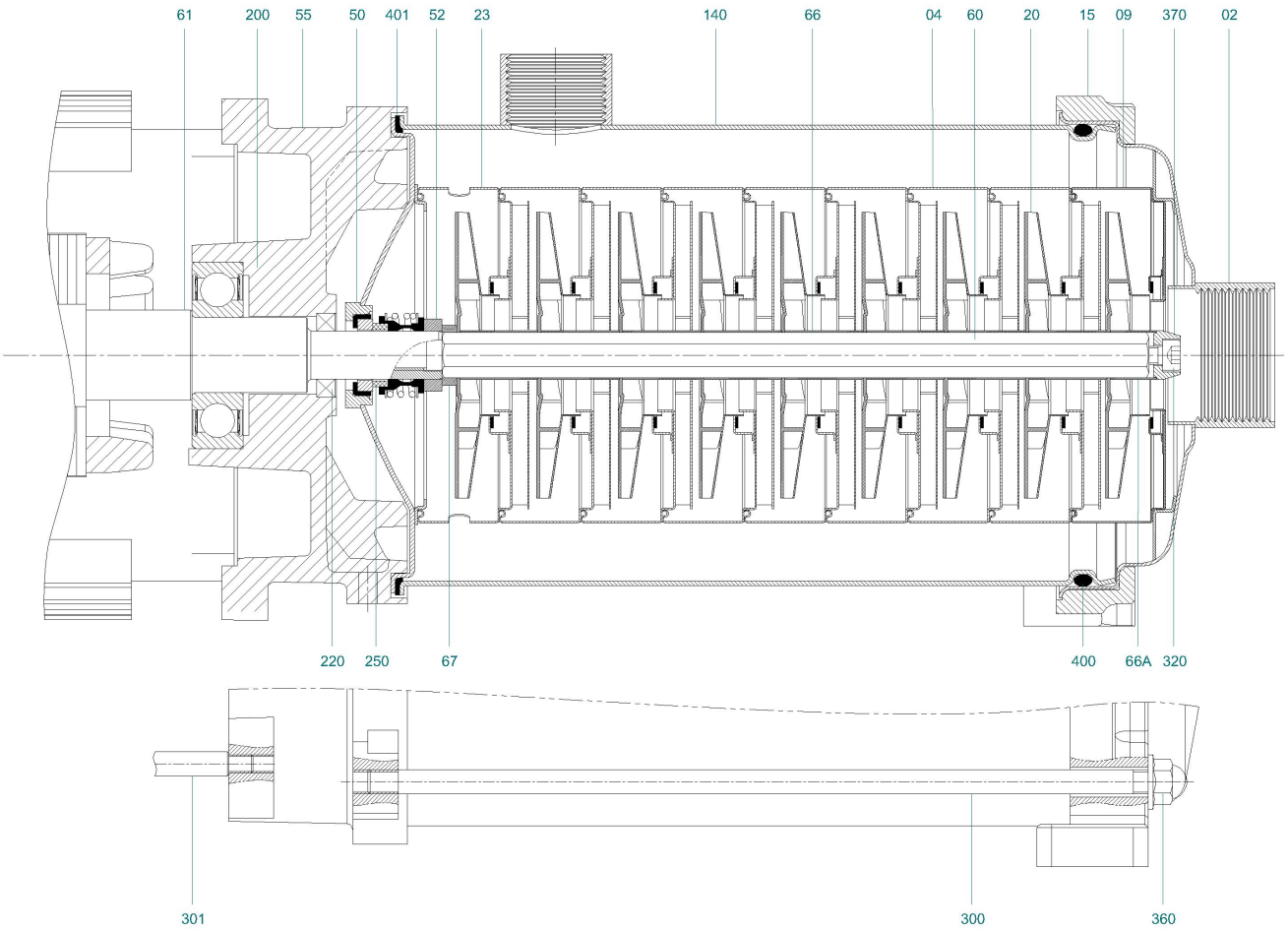

Part No	Part Name	Part No	Part Name	Part No	Part Name
2	Front Case Cover (Suction)	60	Pump Shaft	250	Mechanical Seal
4	Diffuser Stage	61	Motor Shaft	300	Stud
9	Inlet Stage	66	Spacer Bushing (Impeller)	301	Stud (Motor)
15	Thrust Plate	66A	Integration Bush (Length)	320	Imbus Bolt
20	Impeller	67	Fastening Washer (Shaft)	360	Nut
23	Outlet Stage	140	Shield	370	Washer (Impeller)
50	Sealing Bearing	200	Deep Groove Ball Bearing	400	O-Ring
52	Mechanical Seal Press Bush	220	Oil Seal	401	Rubber Gasket
55	Engine Cover				

Spare part list

HexaLite 4/8

	Customer	Supplier
Company name		
Editor		
Phone number		
E-mail		